ITE-SHOP
By professionals for professionals

TECHNICAL DATA SHEET

ISODEPORT RT+

A revolution for ITE

REF: ISODEP002

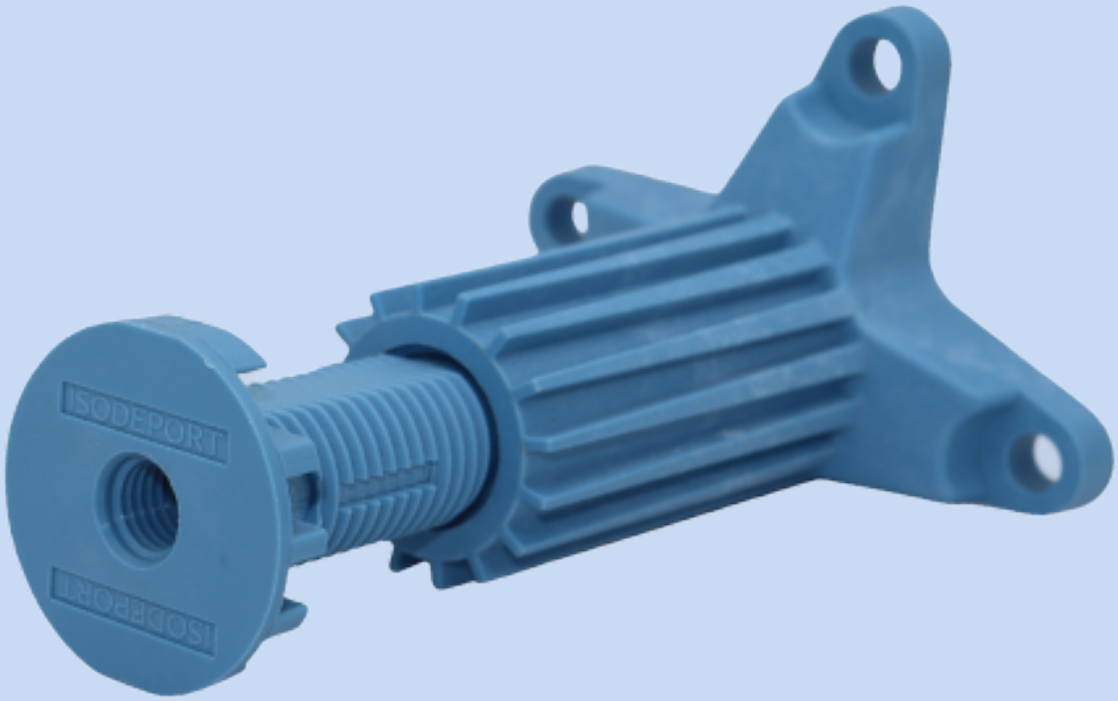

PATENT N°1859279

- A universal load offset with thermal bridge failure
- Quick, easy and all-in-one assembly
- A product designed by ITE professionals
- Designed and patented in France
- Assembly video on the website www.ite-shop.com

CONÇU ET DÉVELOPPÉ EN OCCITANIE

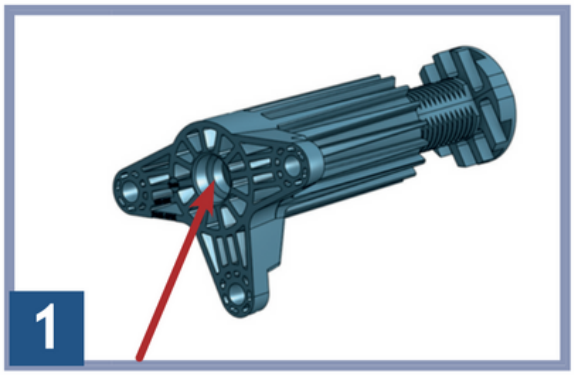

Centering hole.

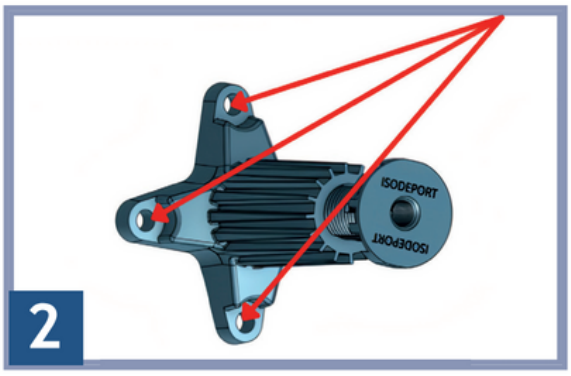

Use dowels adapted to the hollow or solid material support (diameter 8).

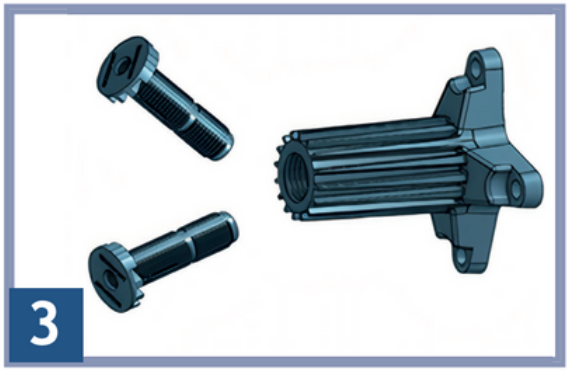

Average loads expect a threaded rod of 8 and for heavy loads a 14 threaded rod.

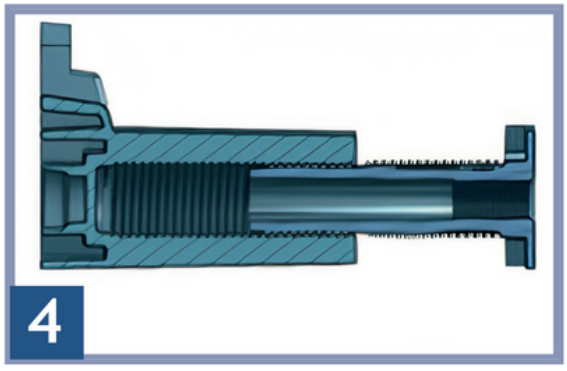

Set your limit switch according to the thickness of the insulation. From 120 to 170 mm.

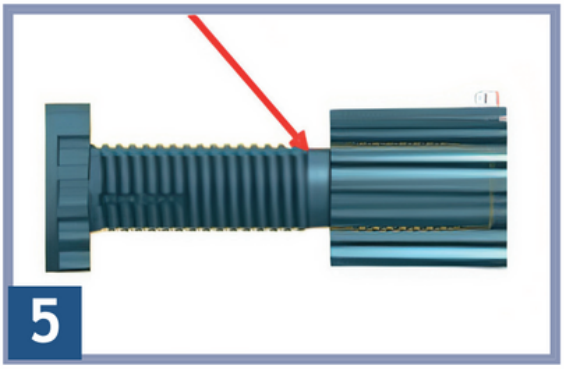

Coding for limit for unscrewing.

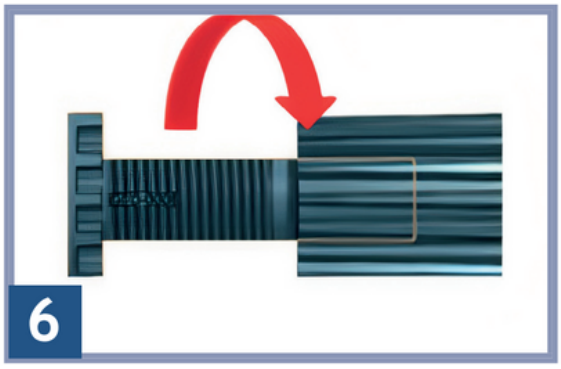

Unscrew 2 or 3 turns, glue and screw it back up to your chosen setting.

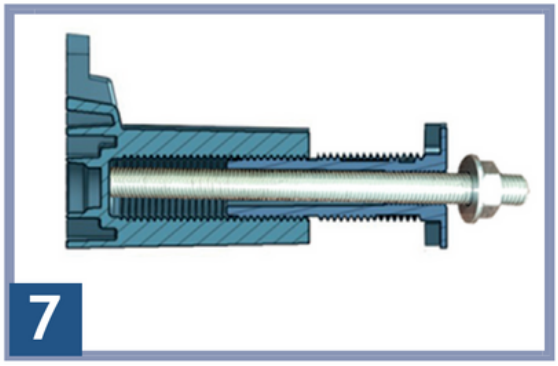

Screw in as far as it will go on the rod threaded and cut using a grinder to the right length. Possibility to offset the load by 50 mm on the threaded rod (170 mm + 50 mm) 220 mm in total.

Scan me !

ISODEPORT RT + resistance table

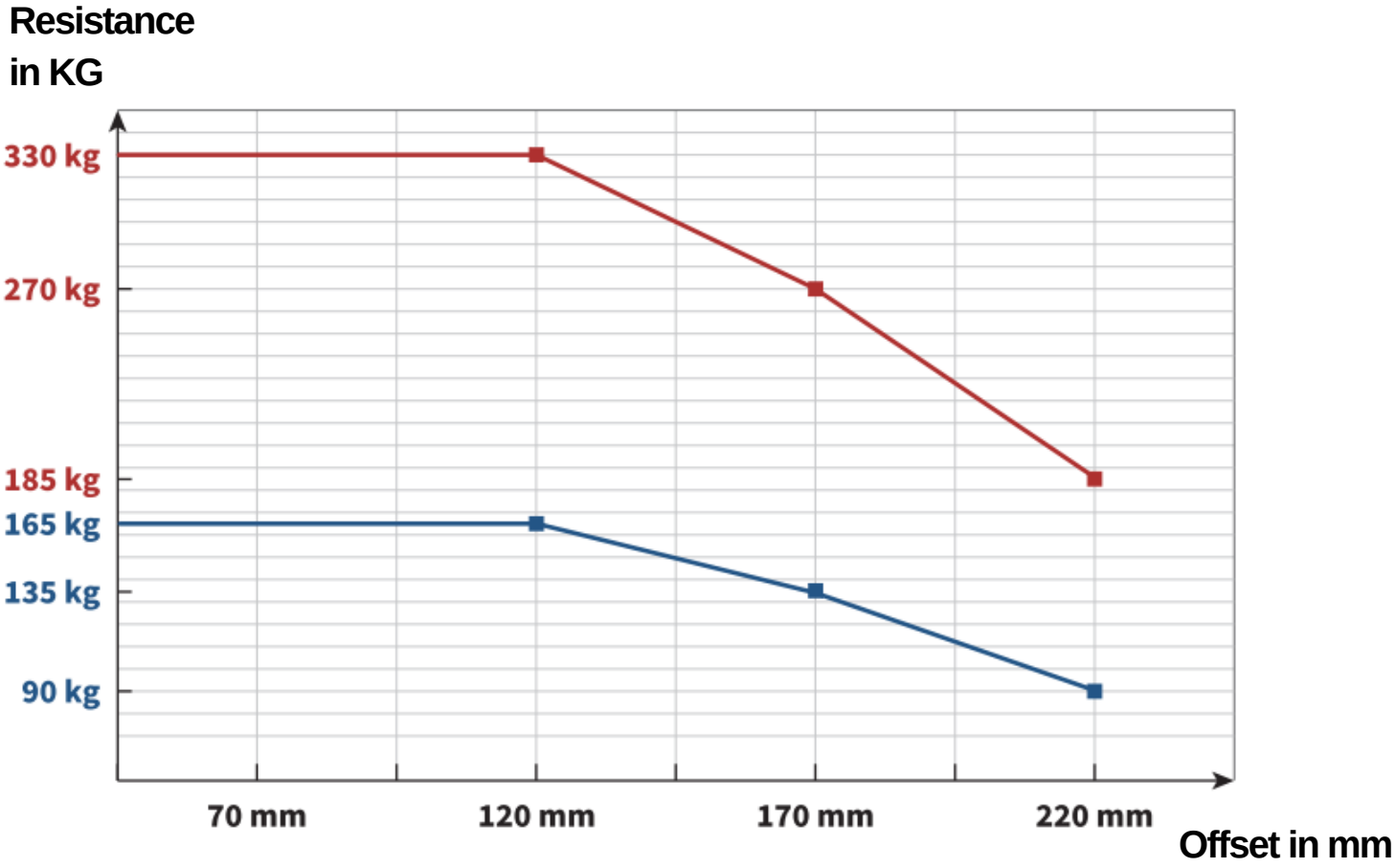

Rupture on vertical destructive test :

- M14 heavy load for 120 mm / 170 mm / 220 mm offset (170 mm + 50 mm rod M14)
- M8 average load for 120 mm / 170 mm offset

Recommended loads :

- M14 heavy load for 120 mm / 170 mm / 220 mm offset (170 mm + 50 mm rod M14)
- M8 average load for 120 mm / 170 mm offset

TECHNICAL DATA

Polyamide 66 30% glass-fiber reinforced polyamide 66

MECHANICS	STANDARDS	VALUES	UNITS
Tensile strength	DIN IN ISO 527	100	Mpa
Elongation at break	DIN IN ISO 527	5	%
Modulus of elasticity Tensile strength	DIN IN ISO 527	5000	Mpa
Impact resistance	DIN IN ISO 178	6	KJ/m²
Ball indentation	DIN IN ISO 2039-1	210	Mpa
Shore D hardness	DIN IN ISO 868	86	D scale
THERMALS	**STANDARDS**	**VALUES**	**UNITS**
Melting temperature	ISO 11357-3	260	°C
Thermal conductivity	DIN 52612-1	0,24	W/(m * k)
Specific heat capacity	DIN 52612	1,5	KJ/(kg * k)
Coefficient of thermal expansion	DIN 53752	50	10-6K-1
Long-term service temperature	Medium	from -20 to 120	°C
Short-term service temperature	Medium	200	°C
Deformation temperature under load	DIN EN ISO 75 METHOD A	150	°C

SECTION: EXAMPLE OF AN AWNING OFFSET

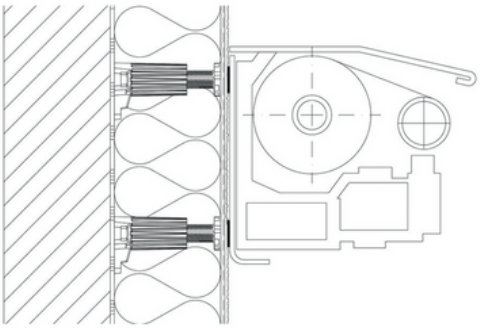

REQUIREMENTS FOR MECHANICAL FASTENING

- The assembly material must be checked and in accordance with the fiels of application (light / medium or heavy loads).
- Where the support is not known, extraction tests to determine the means of fixing before starting the assembly.
- Depending on the solid of hollow supports, use suitable dowels, or use M8 threaded rods injection (chemical sealing).
- Hole diameter Ø 8 mm - threaded rod Ø 8 mm - 100 mm - Drilling diameter : 10 mm - Tool connection : 13.
- It is imperative to fix the ISODEPORT RT+ in 3 anchoring points and to rest the support on the entire surface. Tightening torque for medium loads M8 will be 13 Nm and for heavy loads M14 of 26 Nm.
- Our installation instructions must be followed.
  Attached notice and video on our website www.ite-shop.com

RECOMMENDATION

- Visual check before mounting the ISODEPORT RT+, it must not show any damage that could damage it would compromise the load-bearing capacity and must not have been subjected to long-term stress atmospheric.
- ISODEPORT RT+ can be covered with mortar or plaster coatings.The coating must be resistant to the pressure forces that are generated as a result of the insert.
- When the offset object has a large support surface, it is best to double the ISODEPORT RT+.

ITE-SHOP
By professionals for professionals

Géo Technic - Impasse Teynier 31100 TOULOUSE
www.ite-shop.com - contact@ite-shop.com
SAS with a capital of 100 000 € - SIRET : 532 890 290 00051 - NAF : 4673A